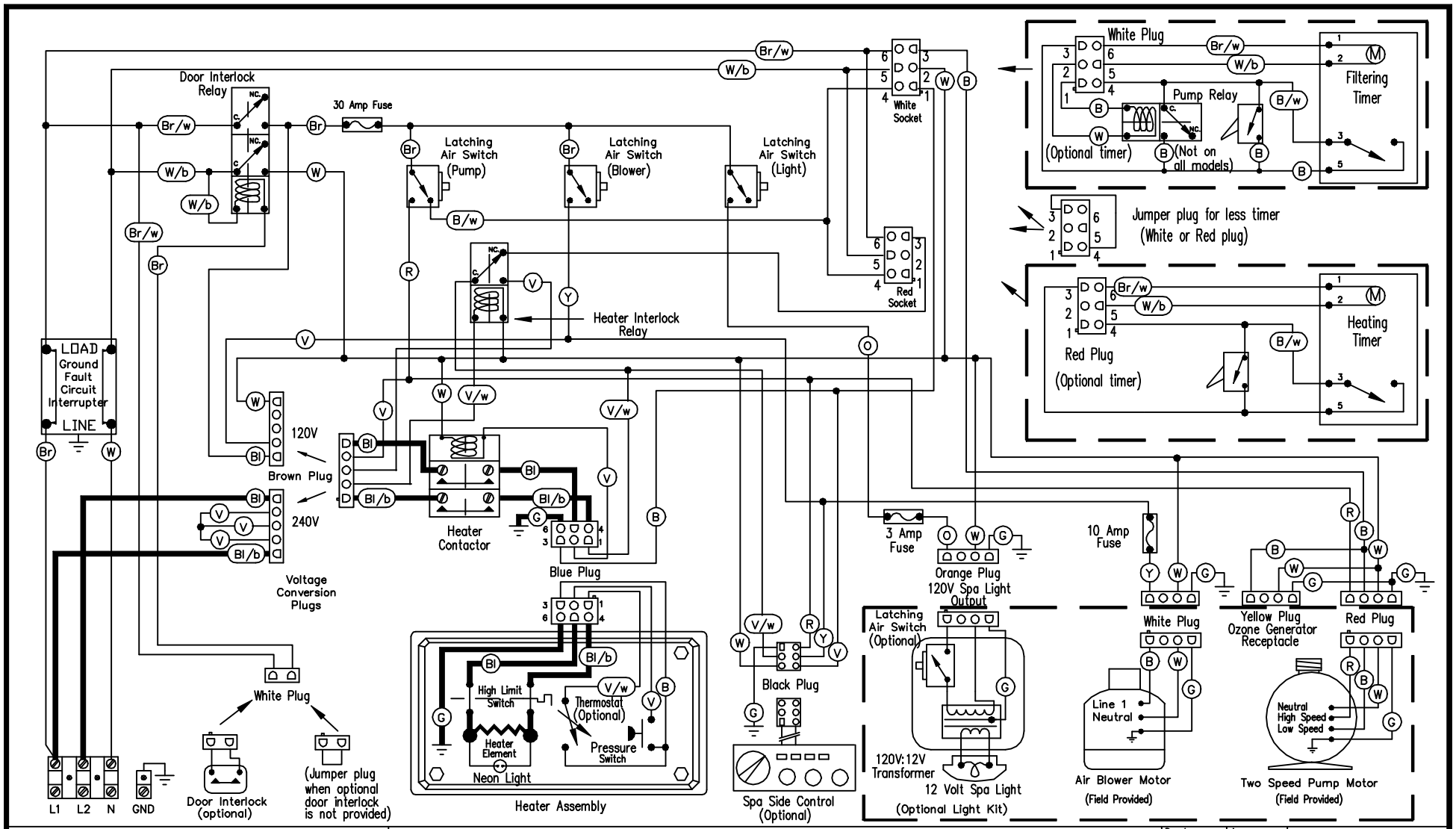

BRETT AQUALINE, INC.
HUNTINGTON BEACH, CA (714) 891-7211

Manufacture Notes:

Dm by G.B.

Aprv

Catalog Series: 28-CM20 May be followed by additional suffix letters and numbers

Spa Pack Model: CM-20

1. Relays and switches shown may actually be single or double pole

Dwg No: WCM02A

Date: 01-21-91

Rev: 0

Wire Color Code

B - Black	G - Green
Br - Brown	Bl - Blue
R - Red	V - Violet
O - Orange	W - White
Y - Yellow	